7720

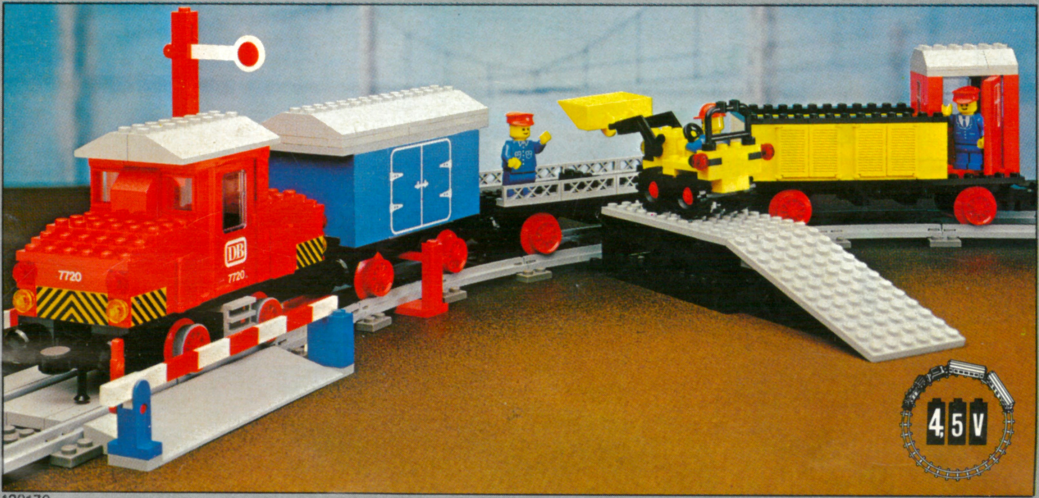

120172

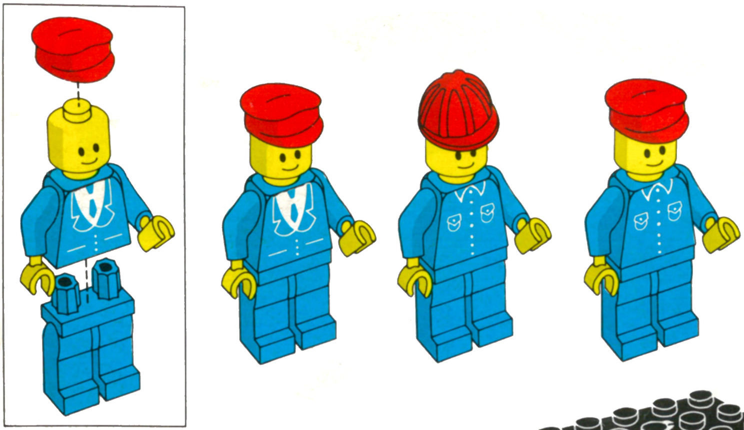

1

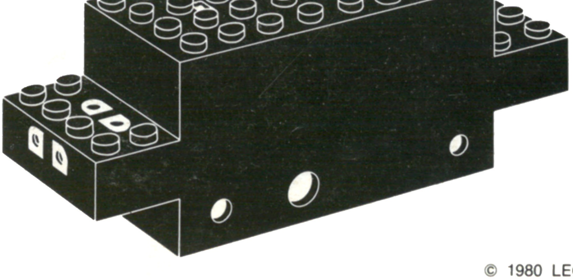

© 1980 LEGO System A/S

2

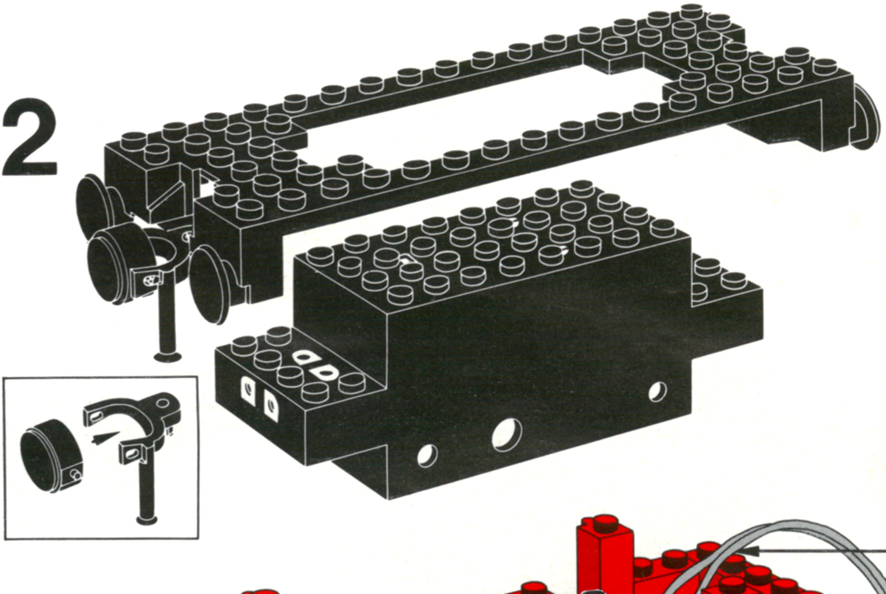

3

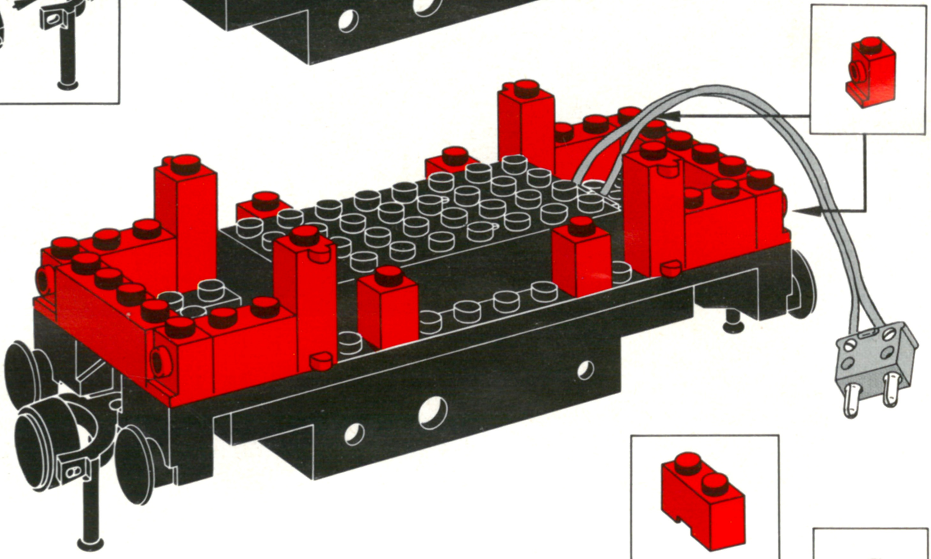

4

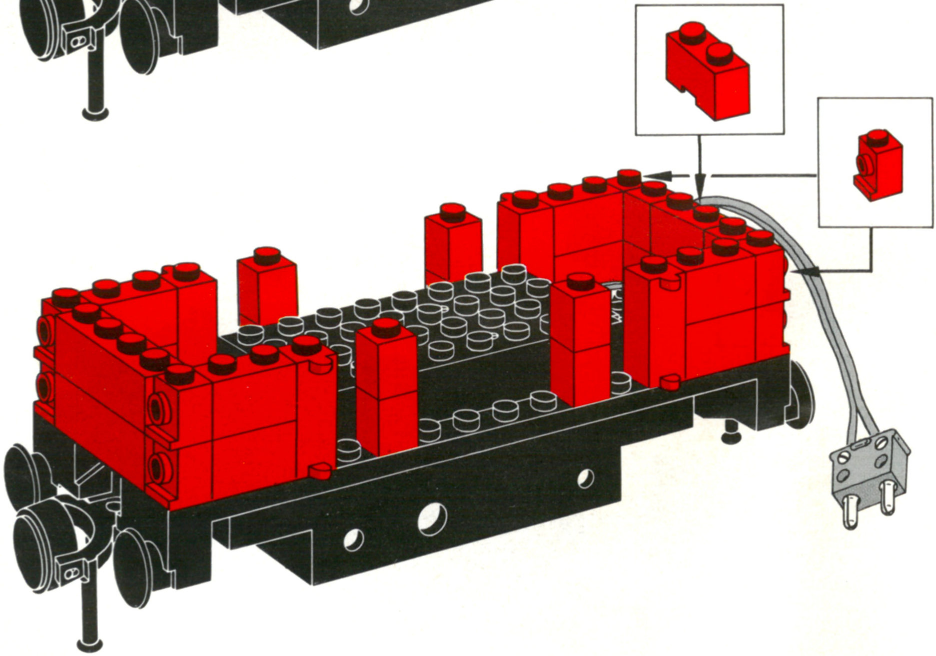

5

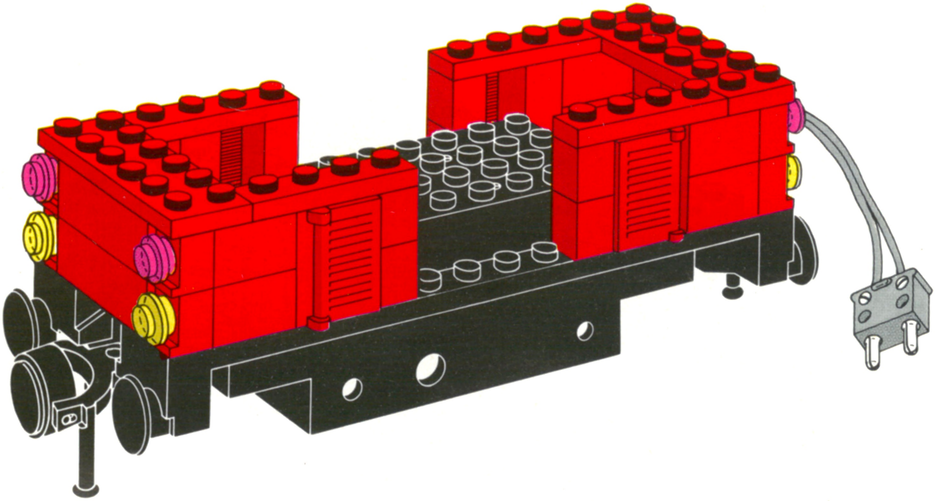

6

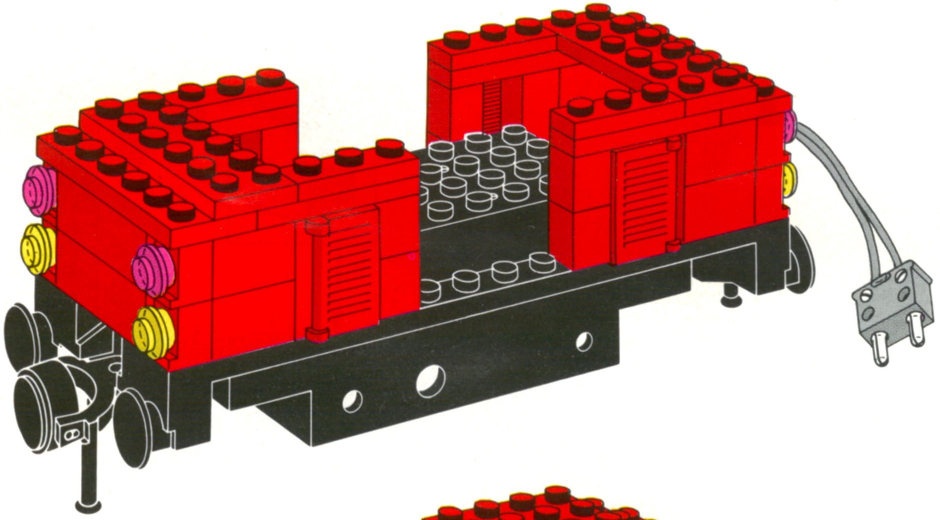

7

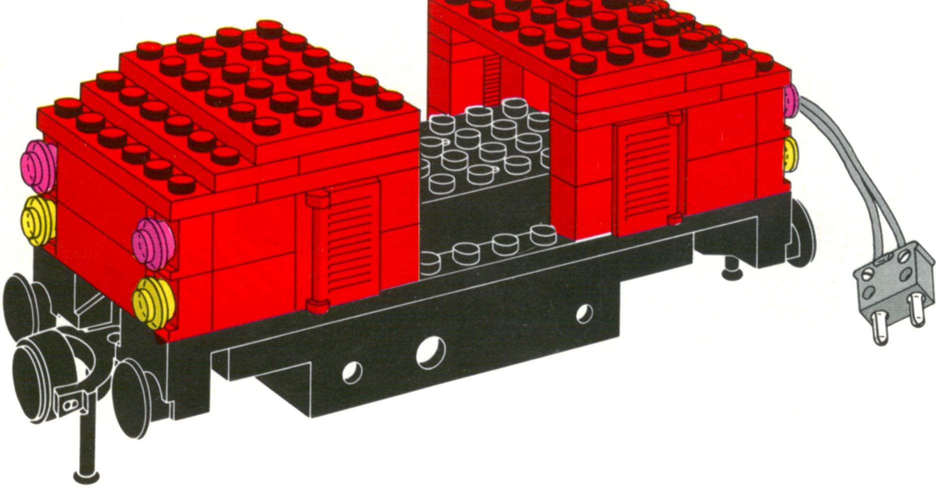

8

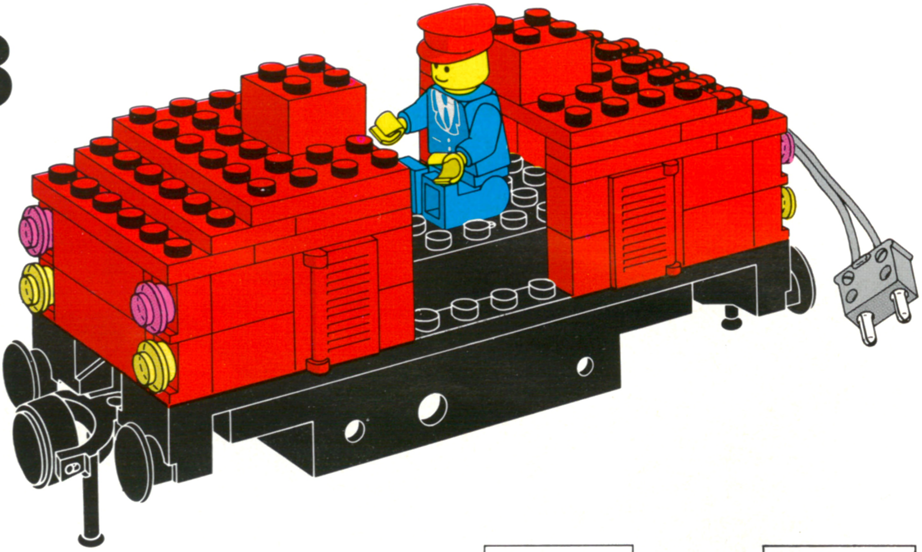

9

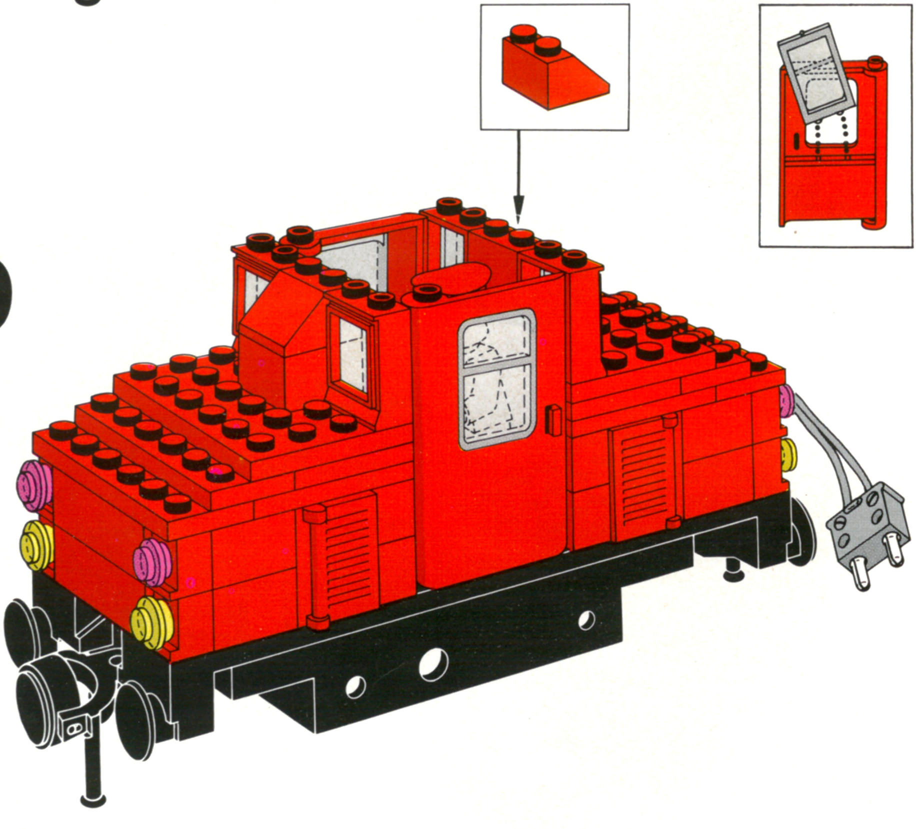

10

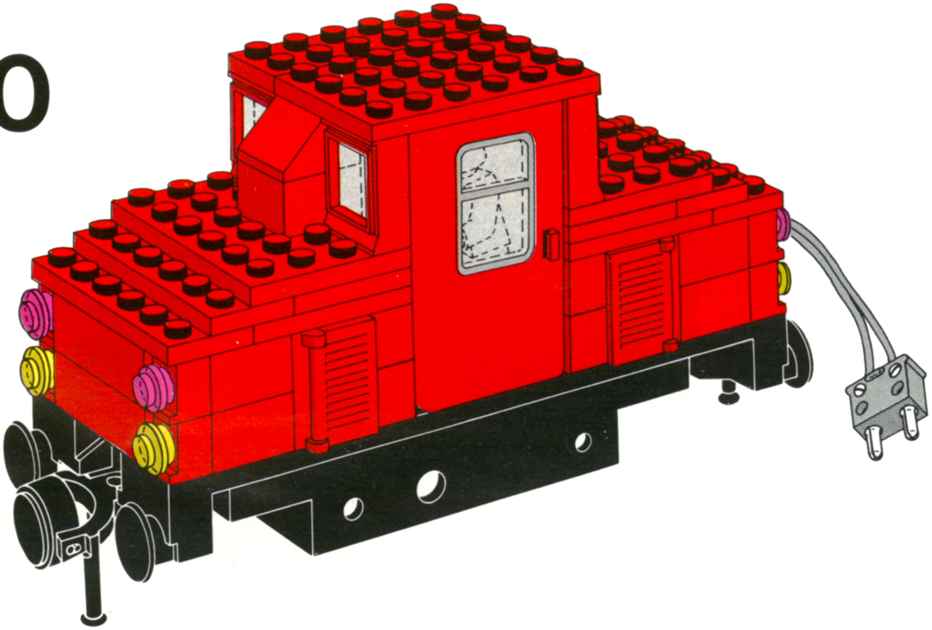

11

1

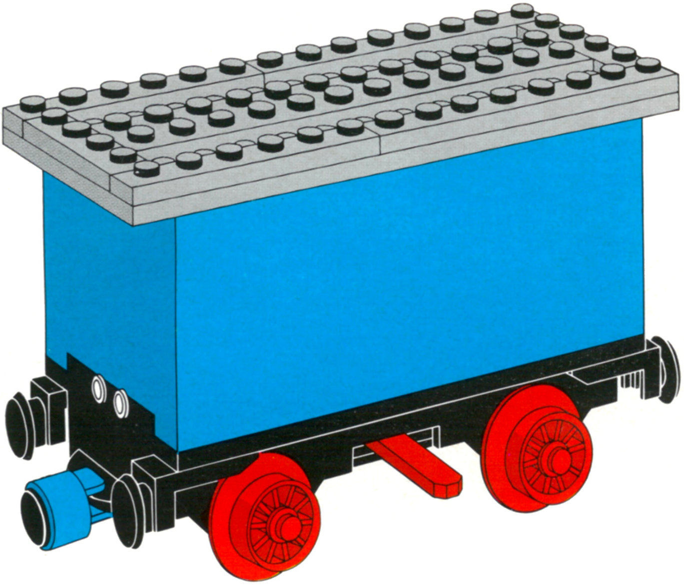

2

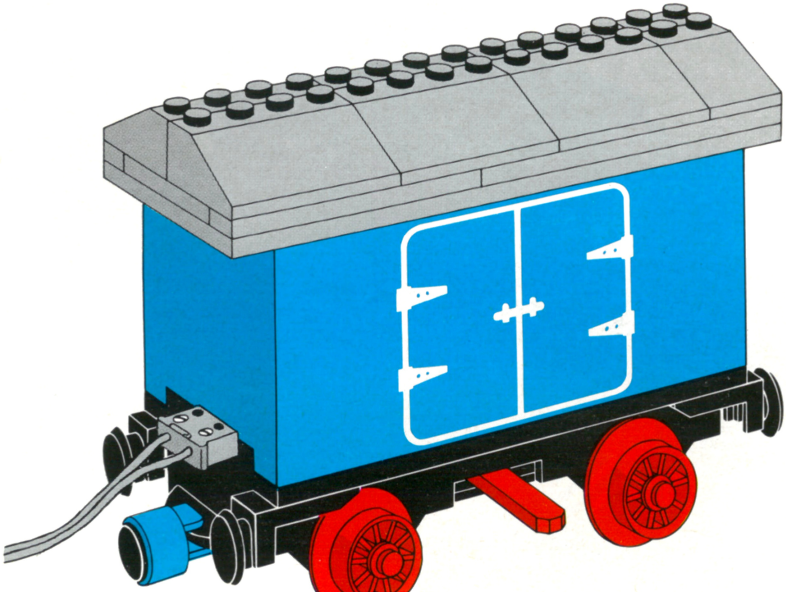

1

2

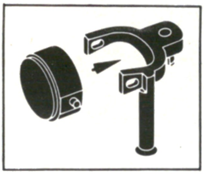

3

4

5

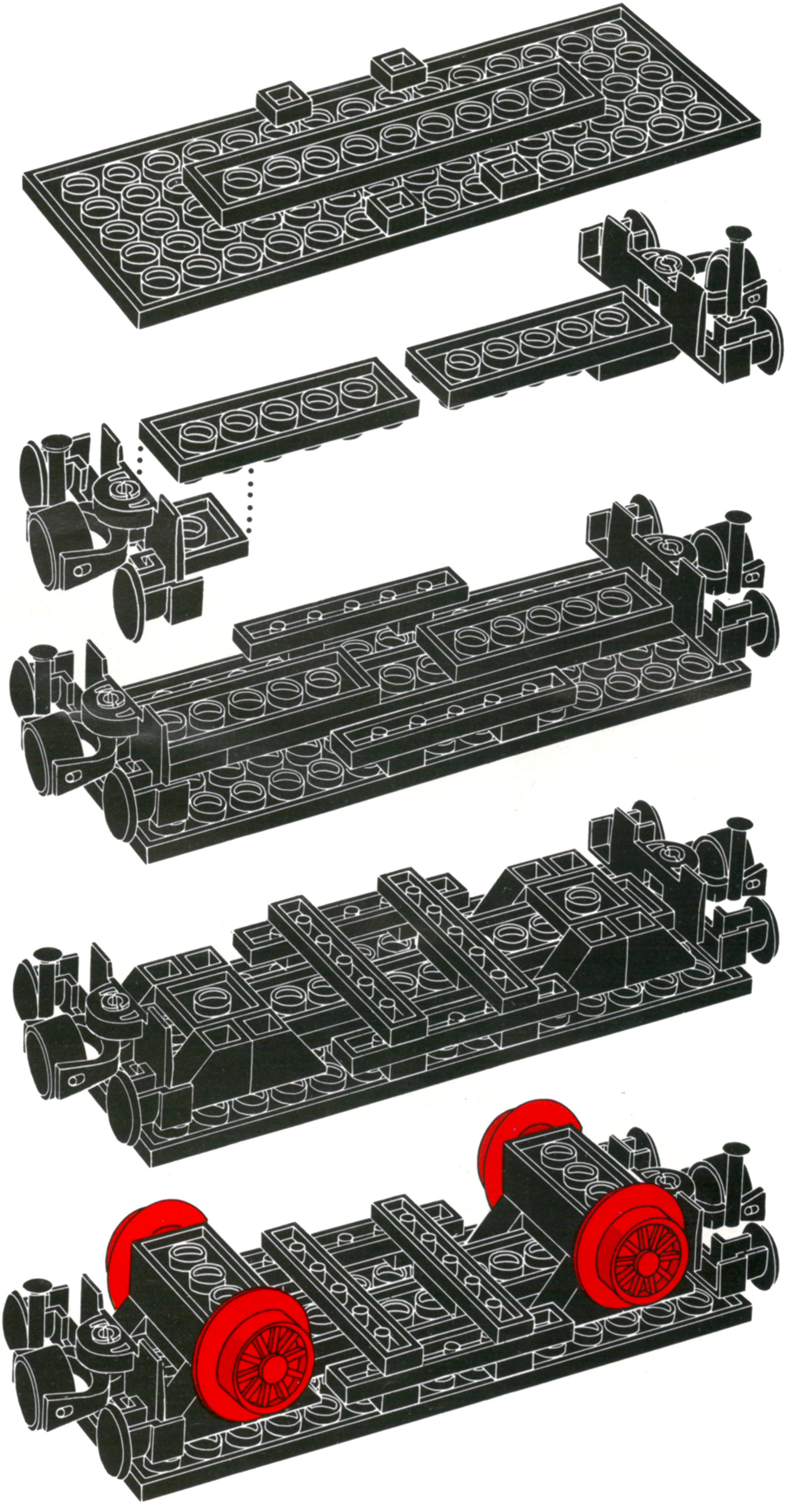

6

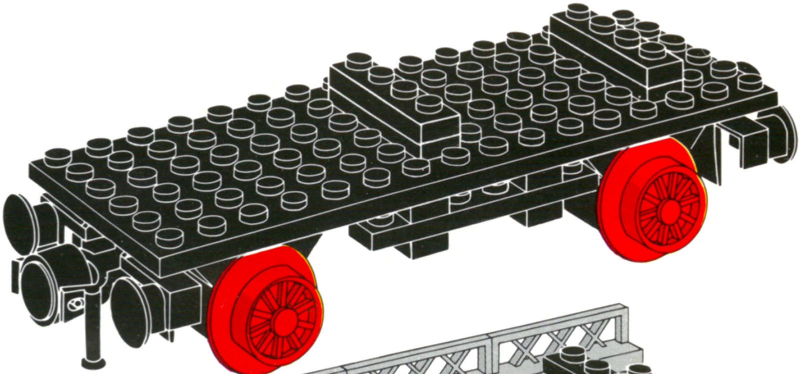

7

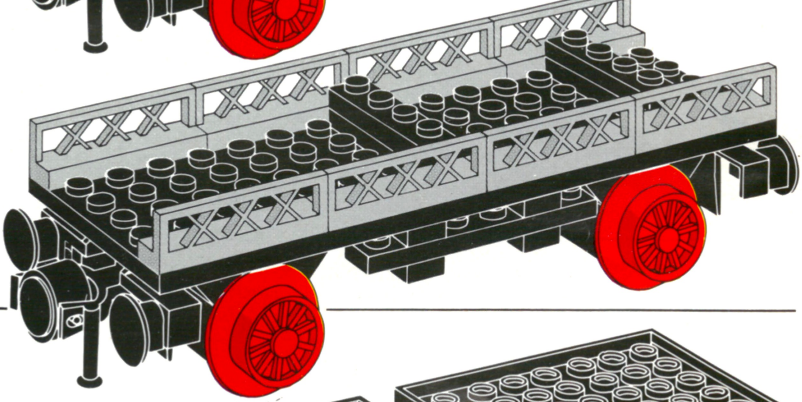

1

2

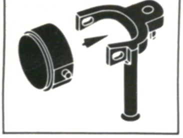

3

4

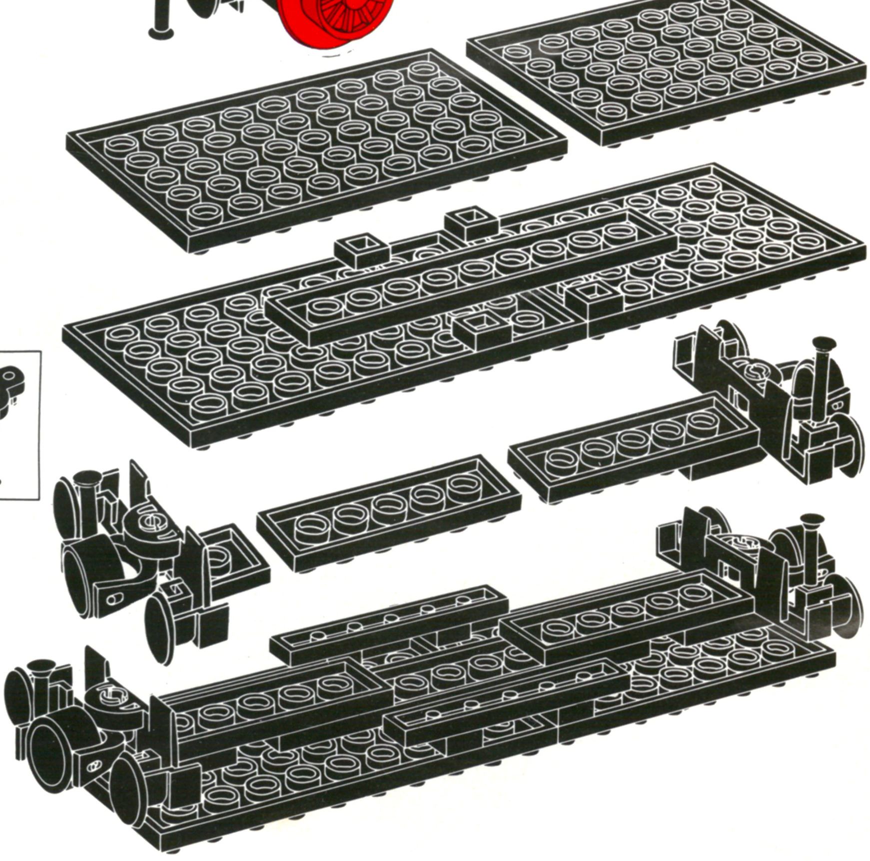

5

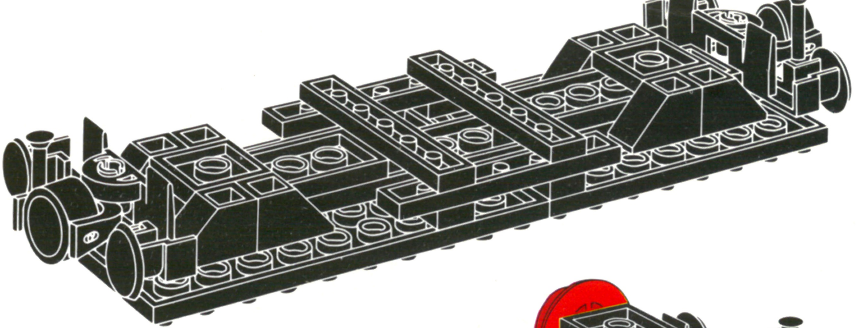

6

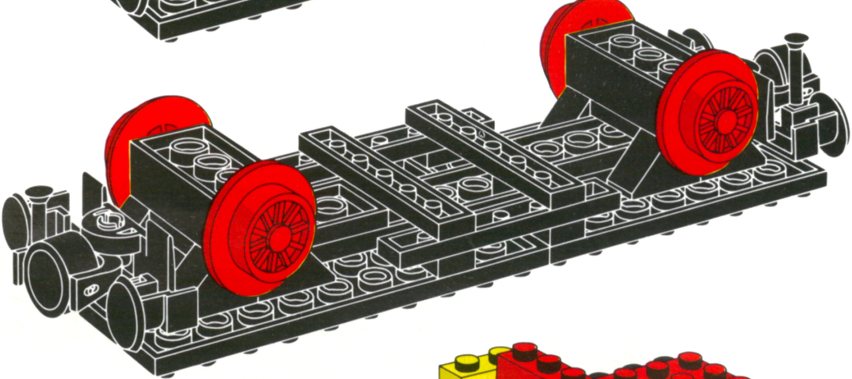

7

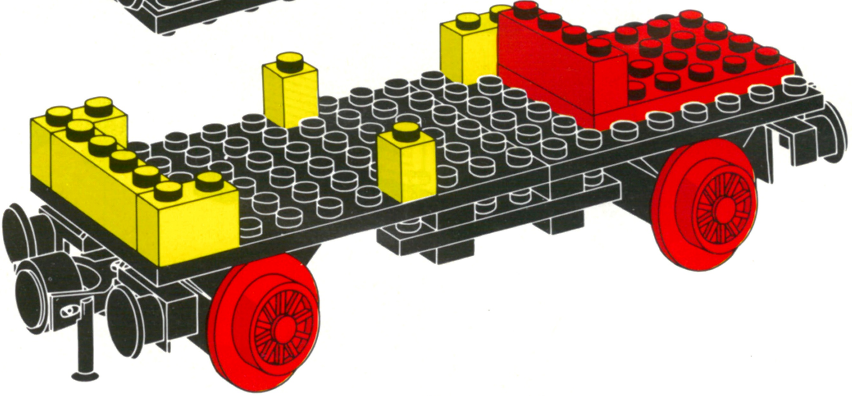

8

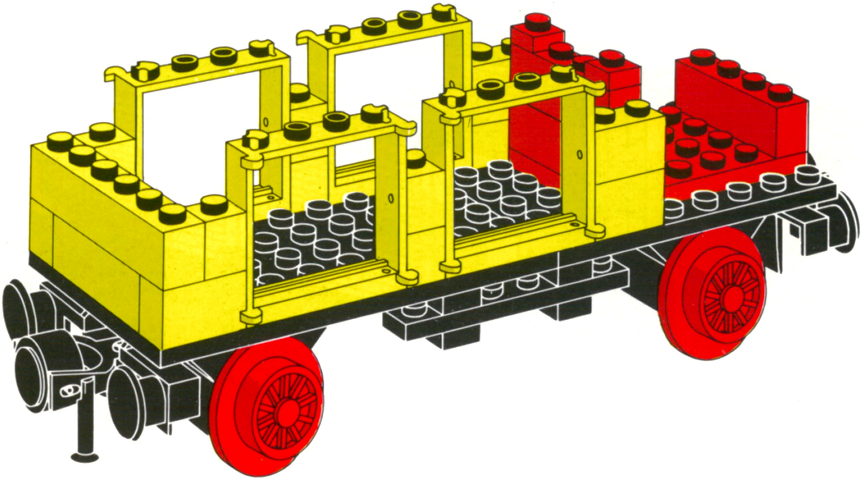

9

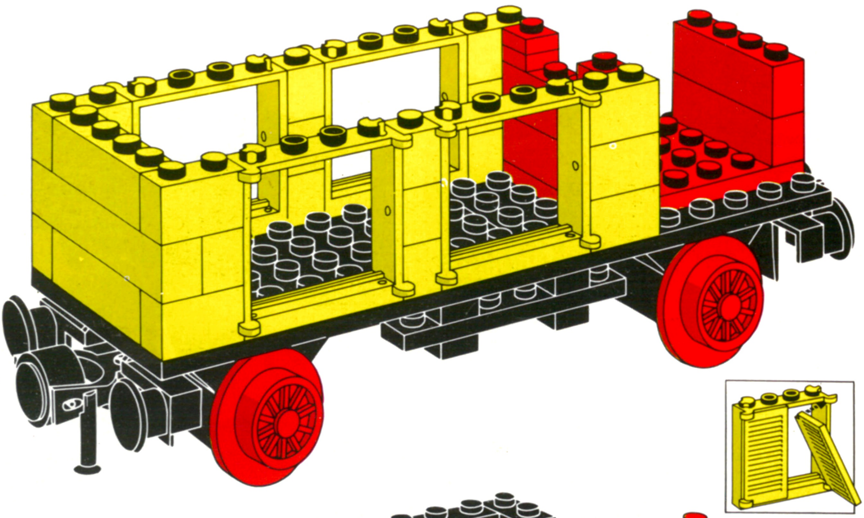

10

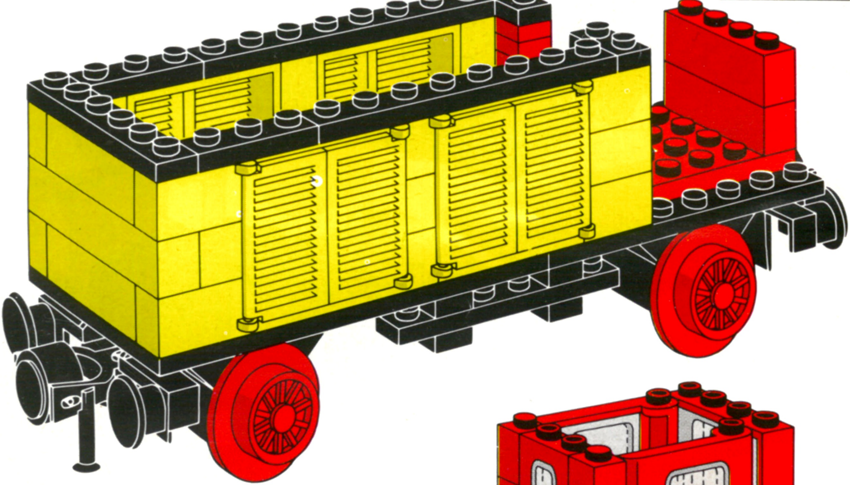

11

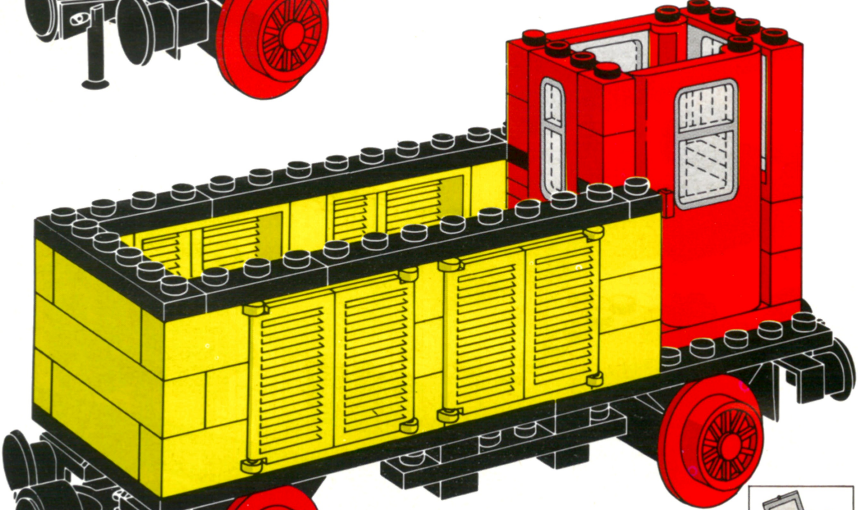

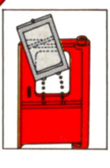

12

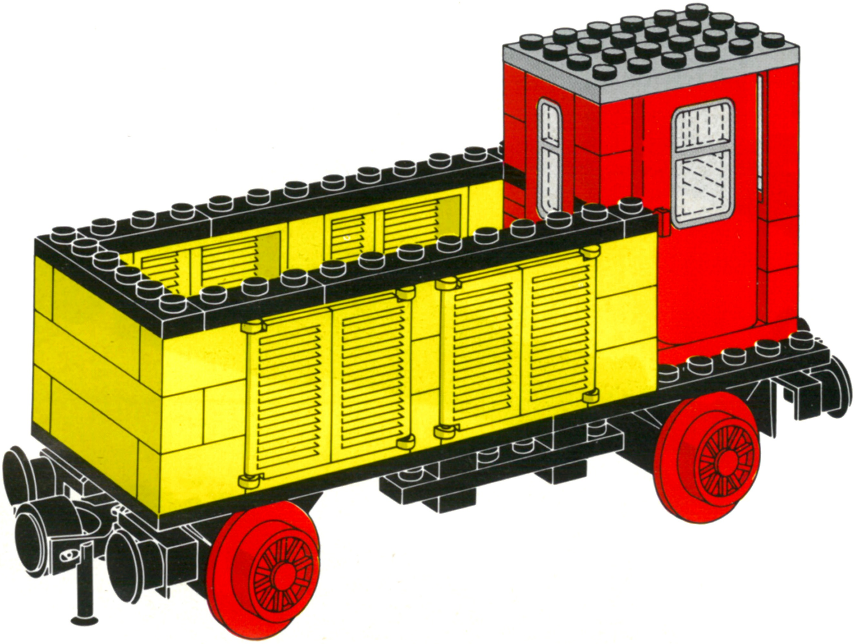

13

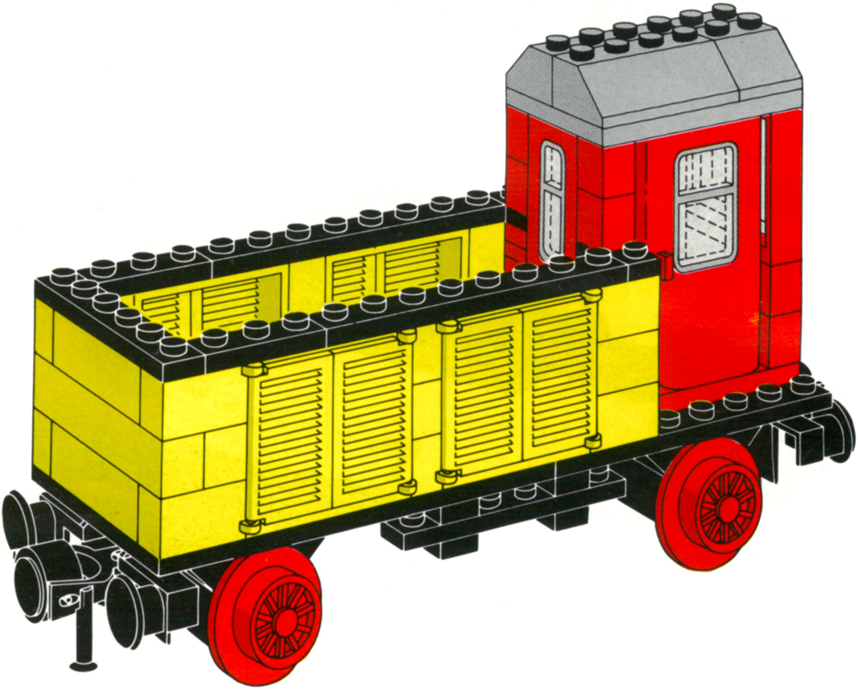

1

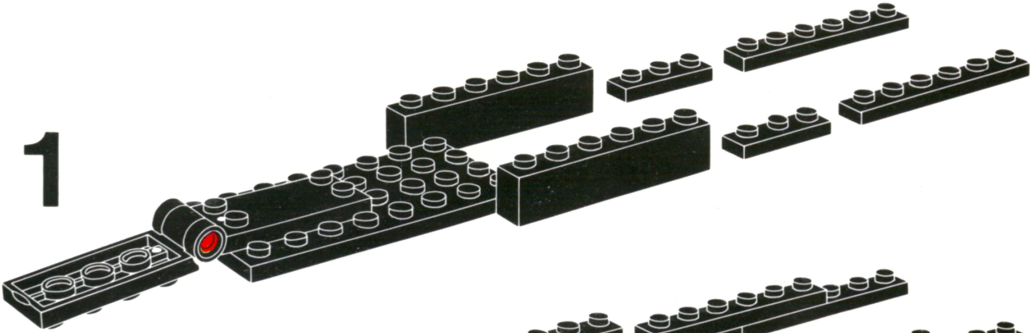

2

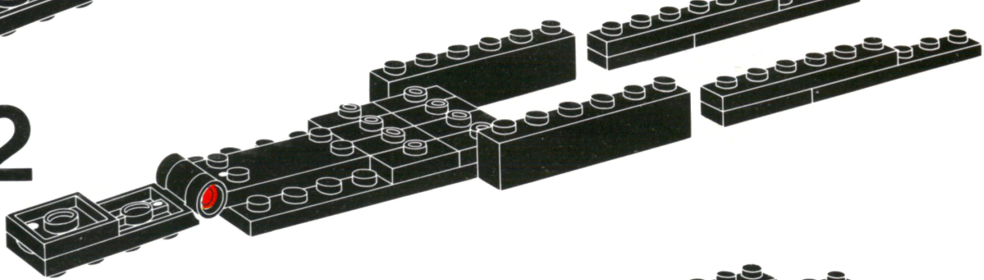

3

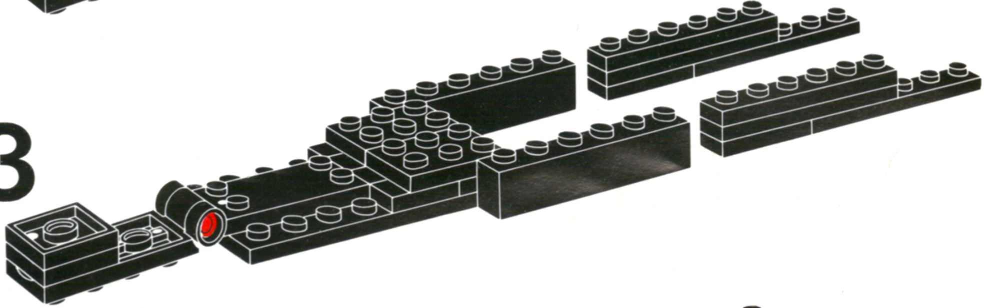

4

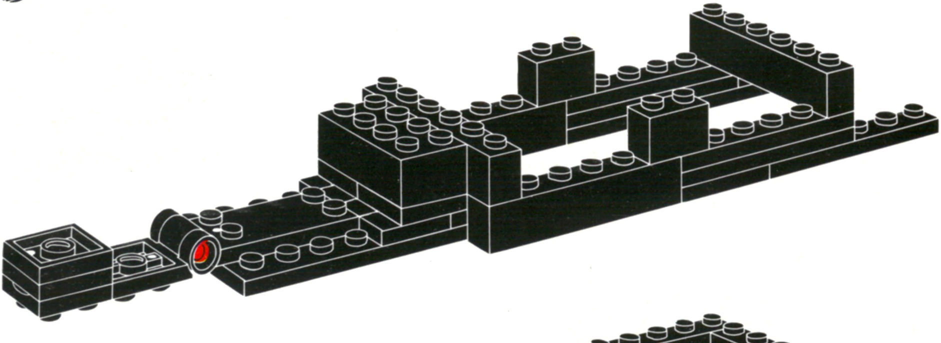

5

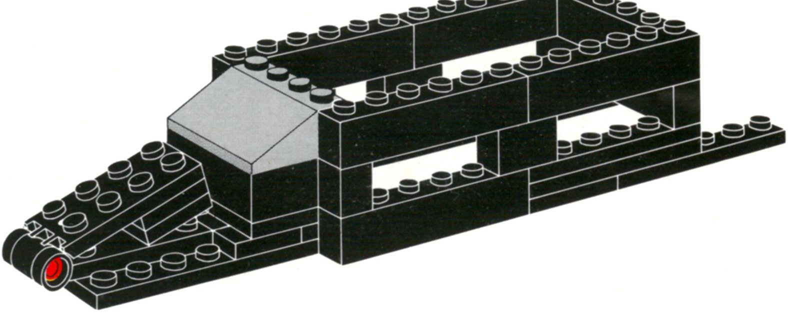

6

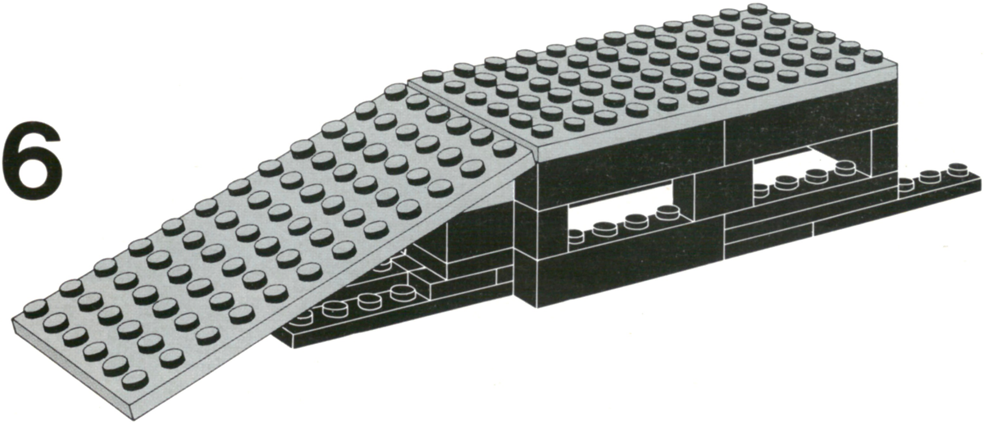

1

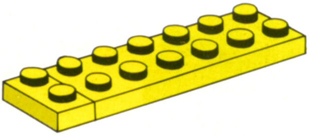

2

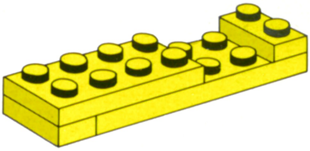

3

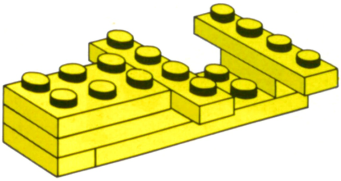

4

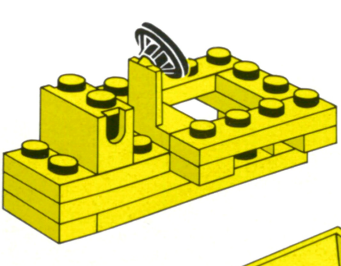

5

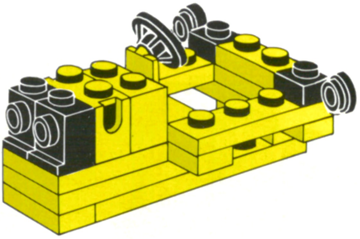

6

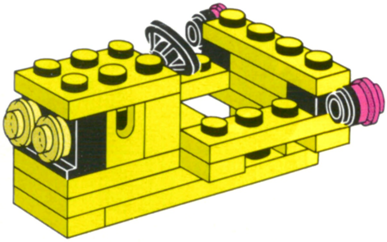

7

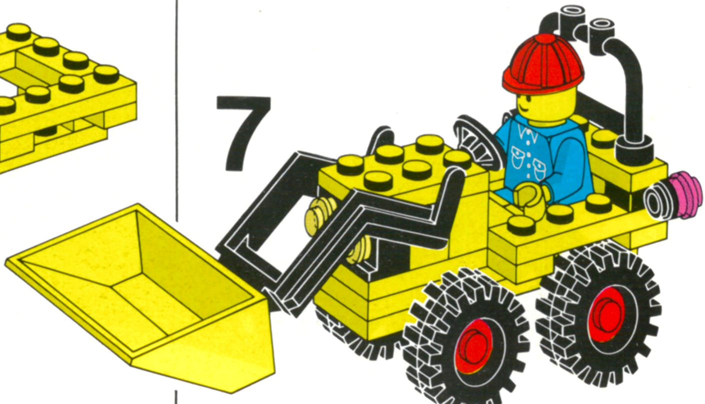

1

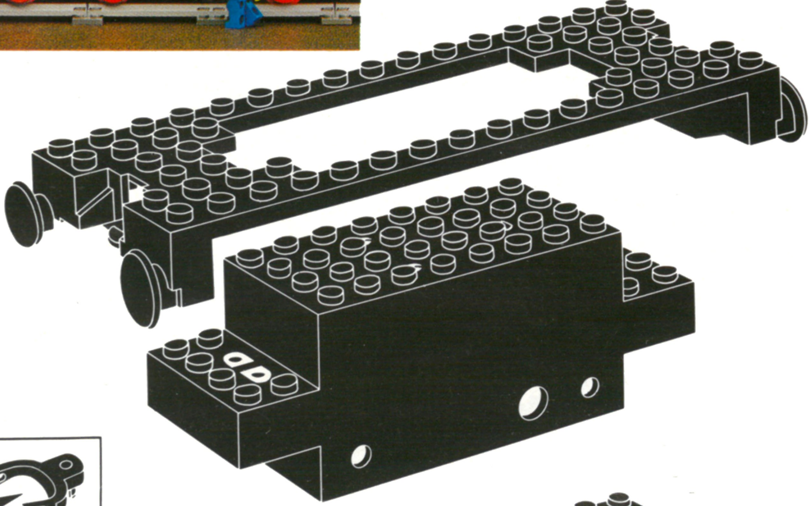

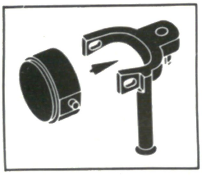

2

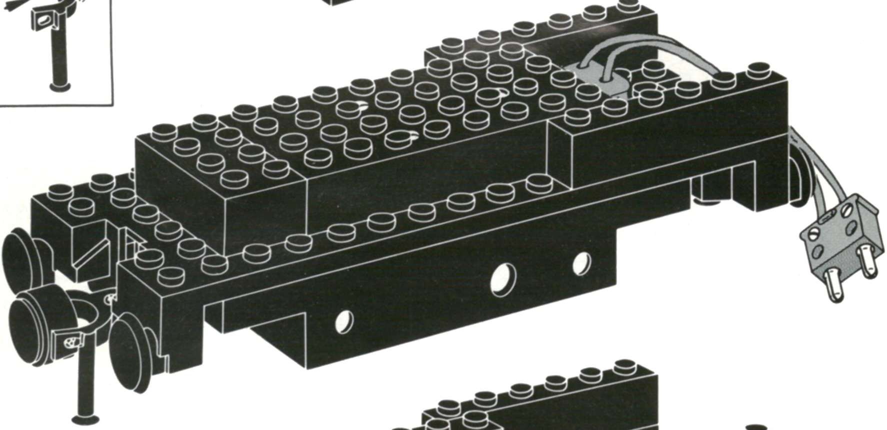

3

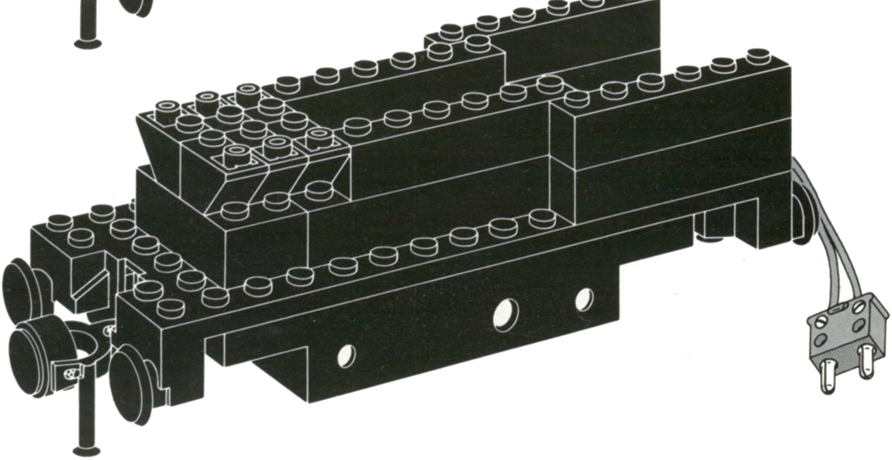

4

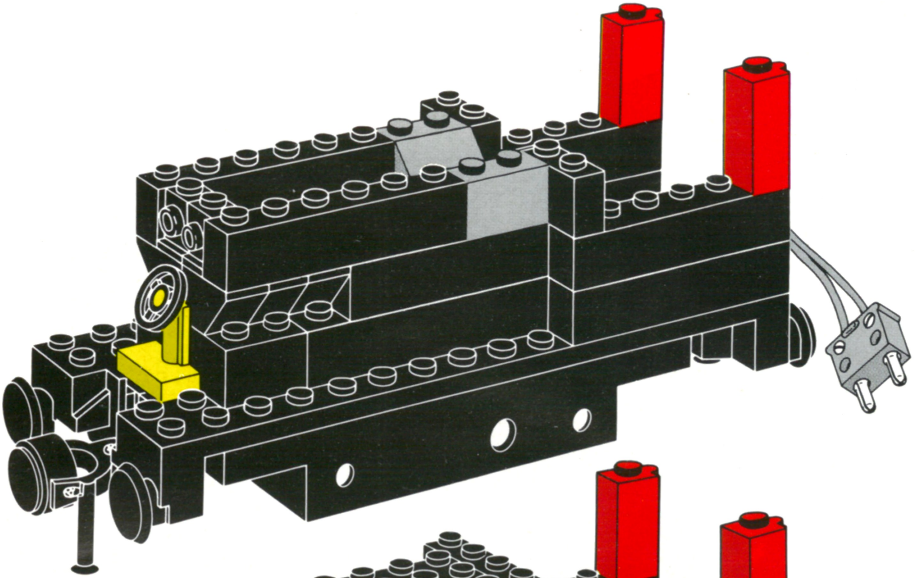

5

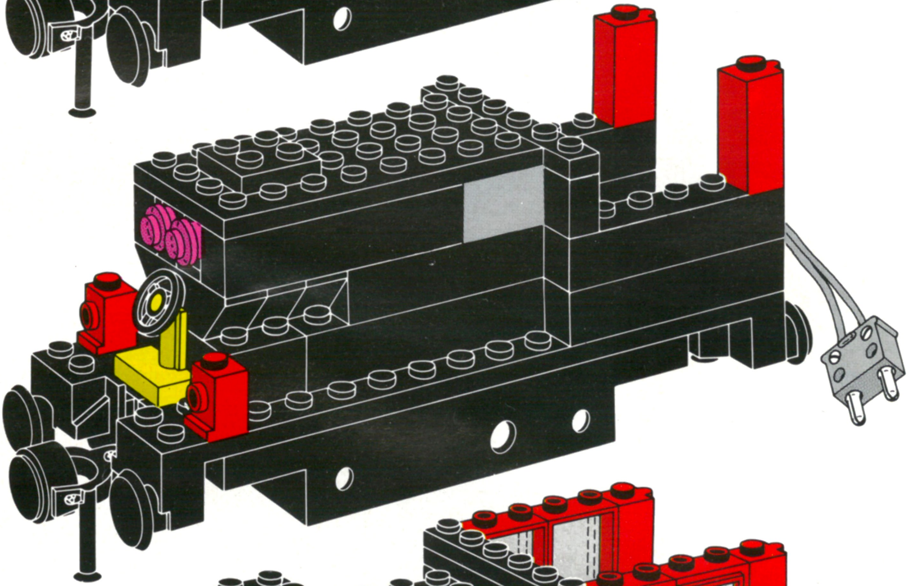

6

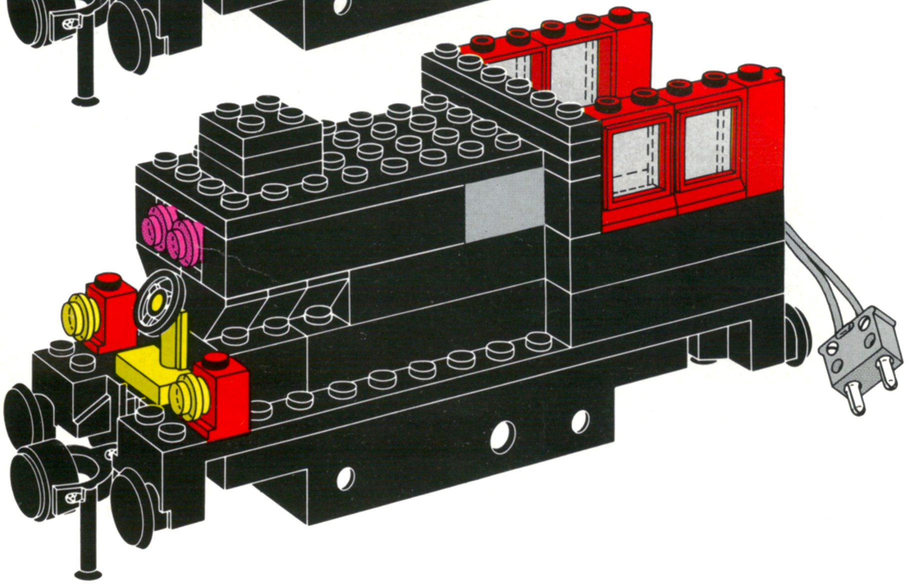

7

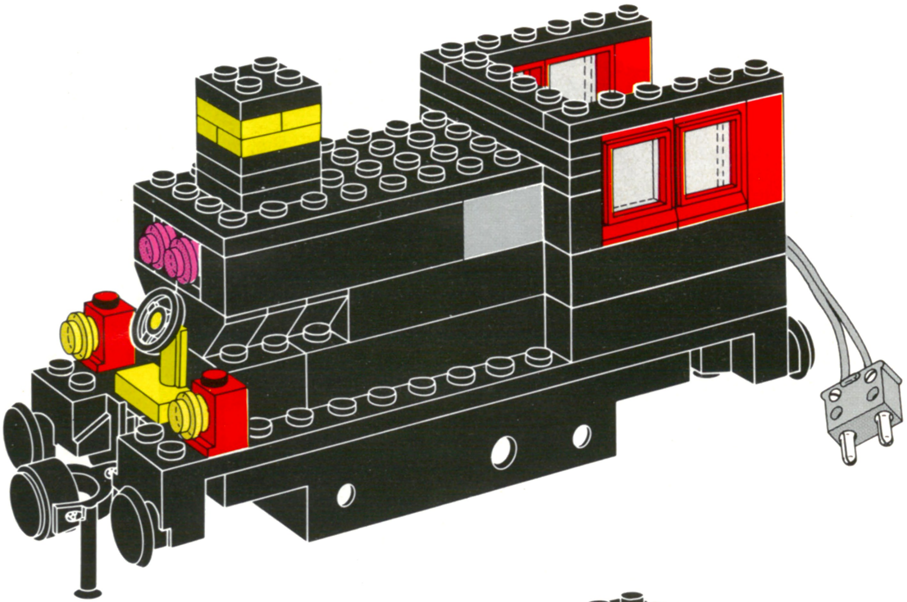

8

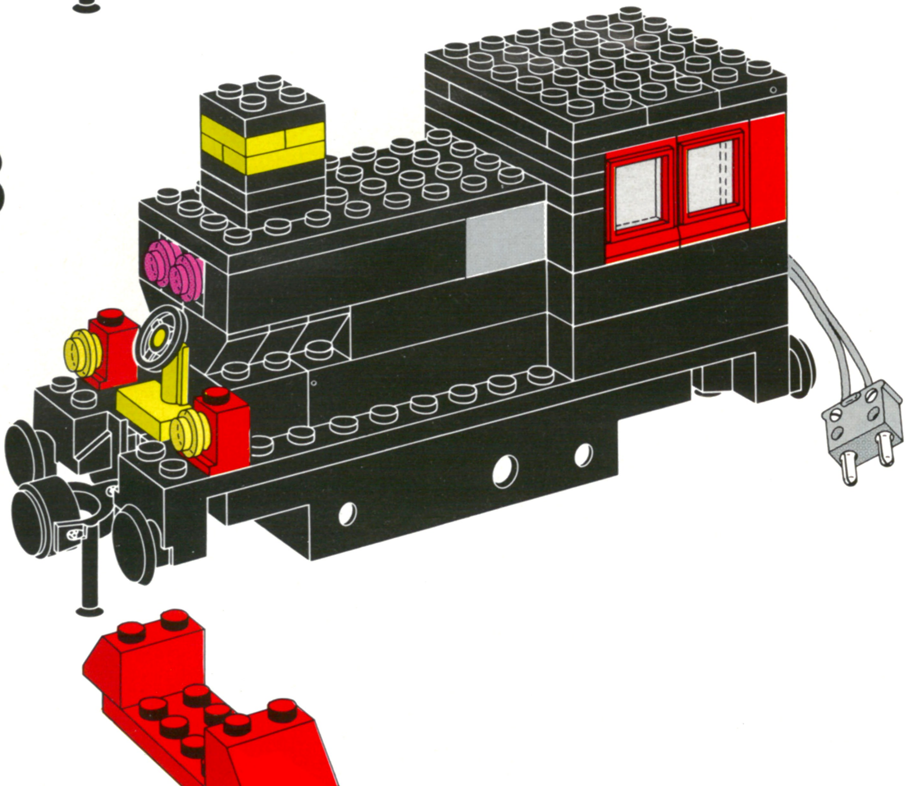

9

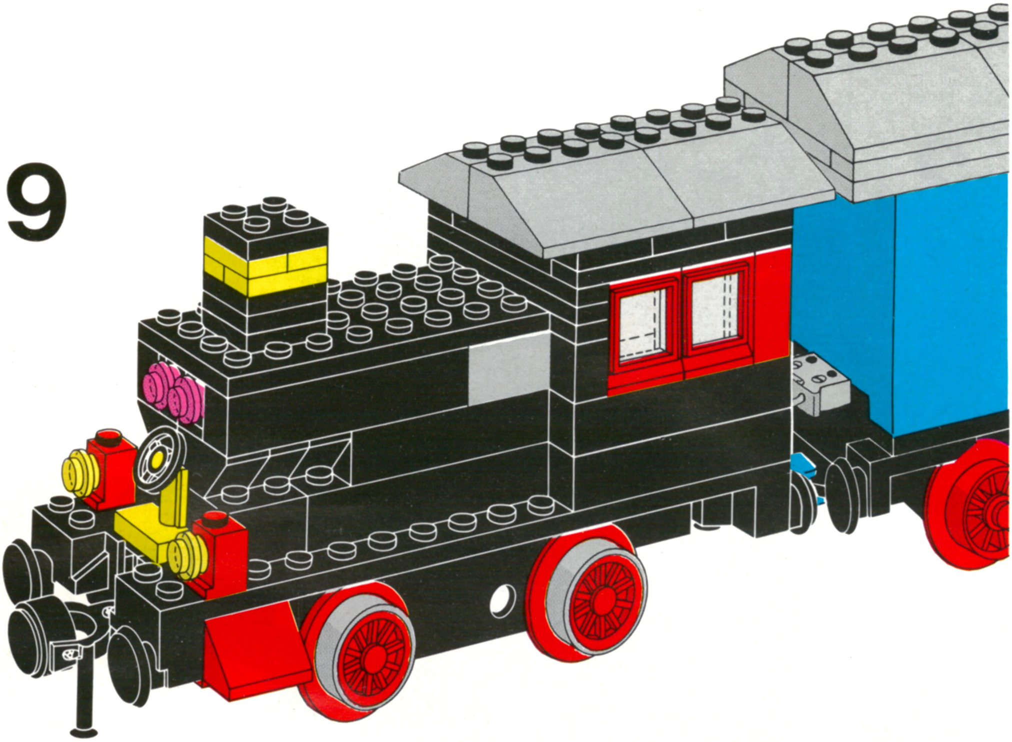

1

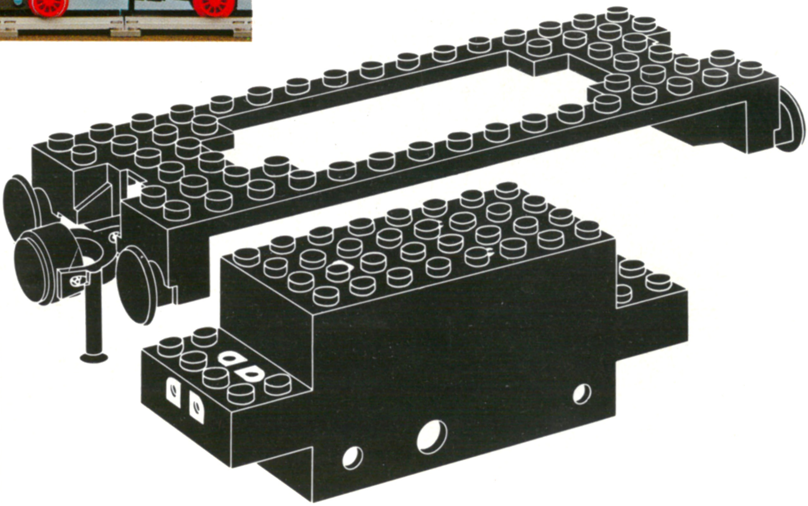

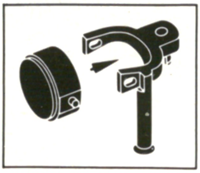

2

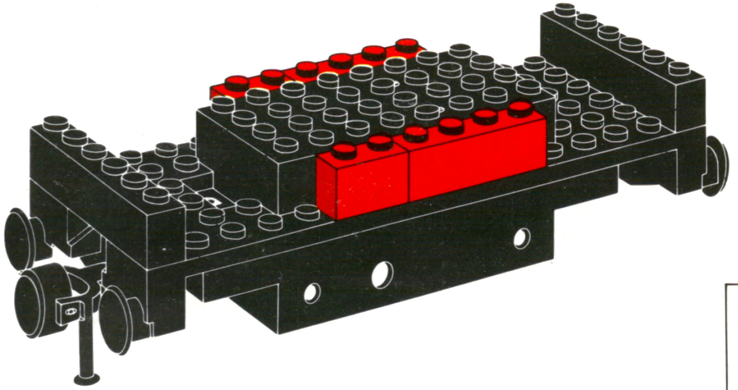

3

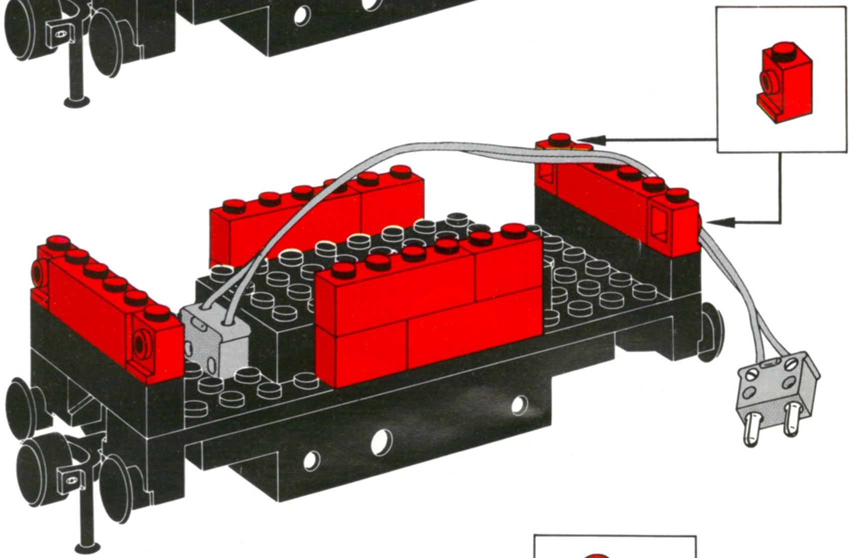

4

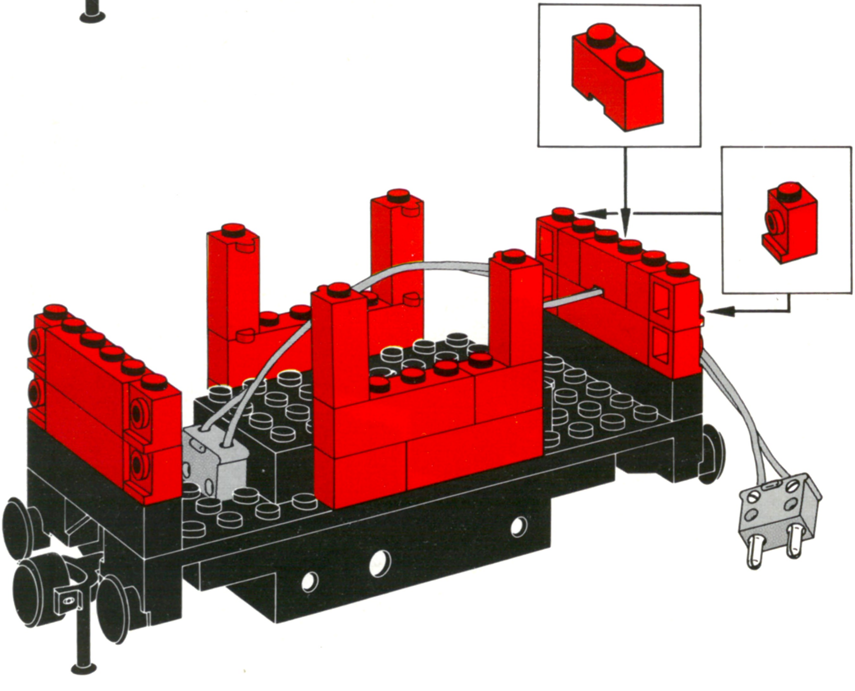

5

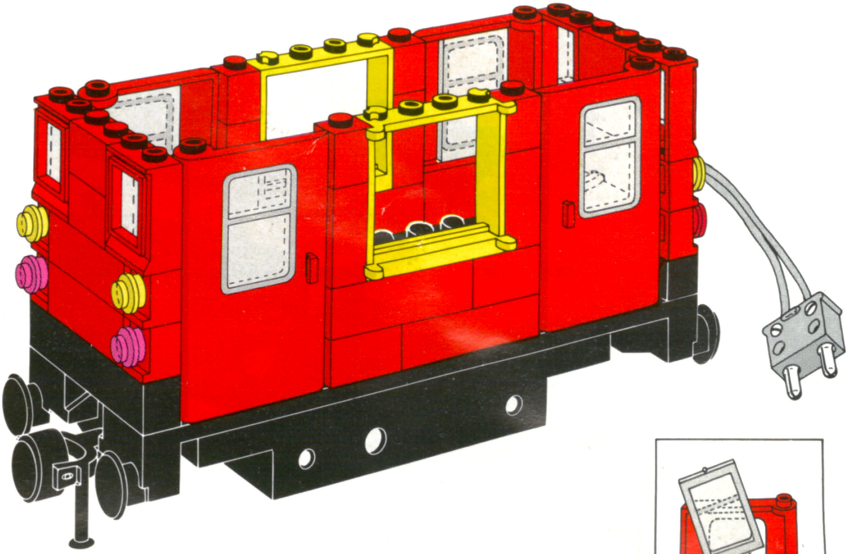

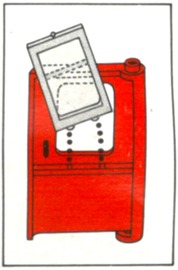

6

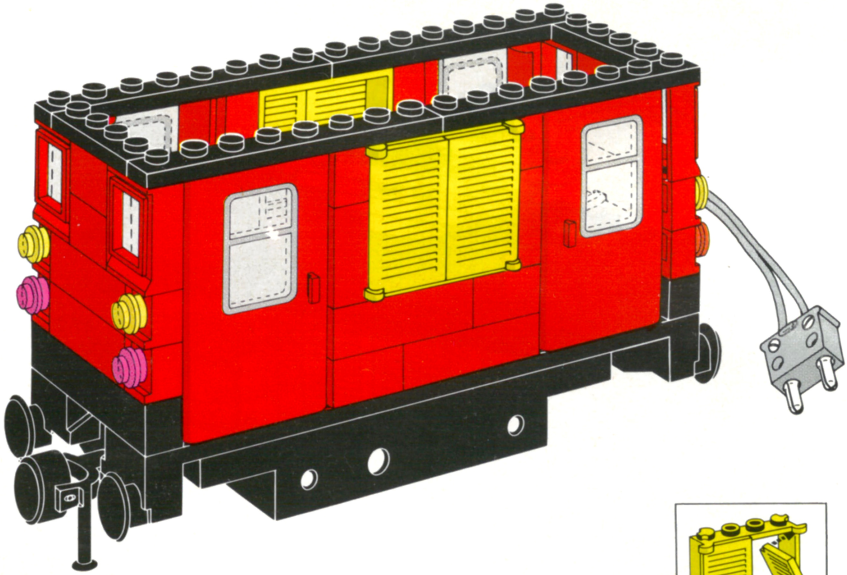

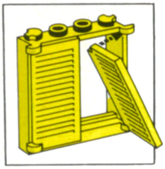

1

2

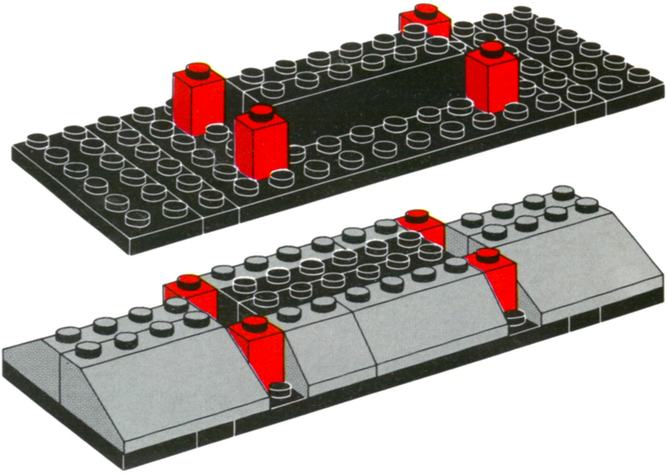

1

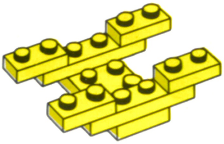

2

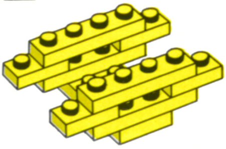

3

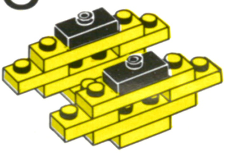

4

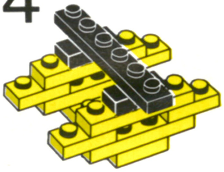

7

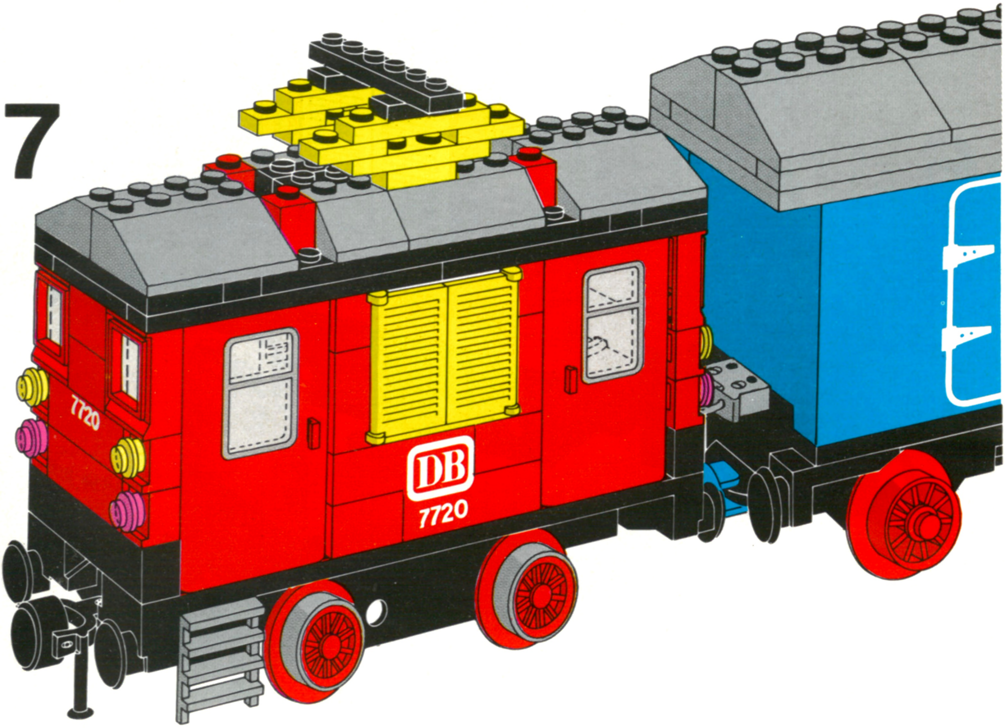

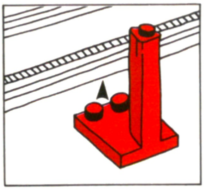
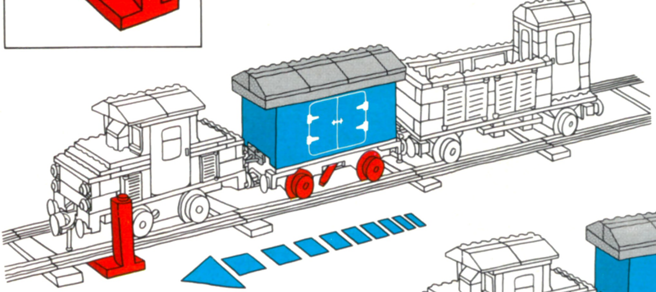
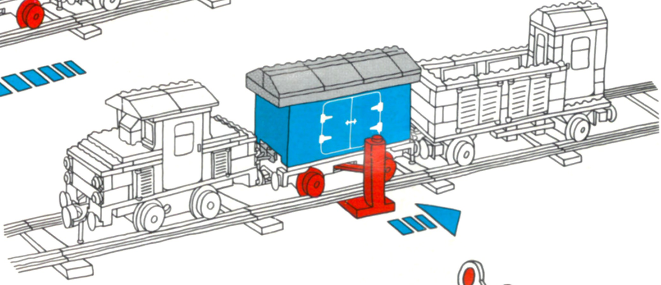
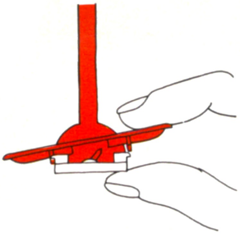
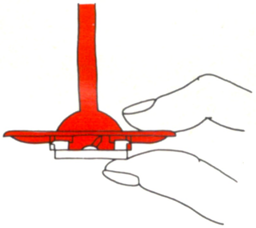
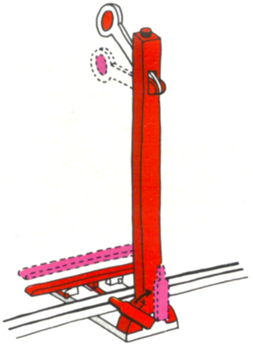
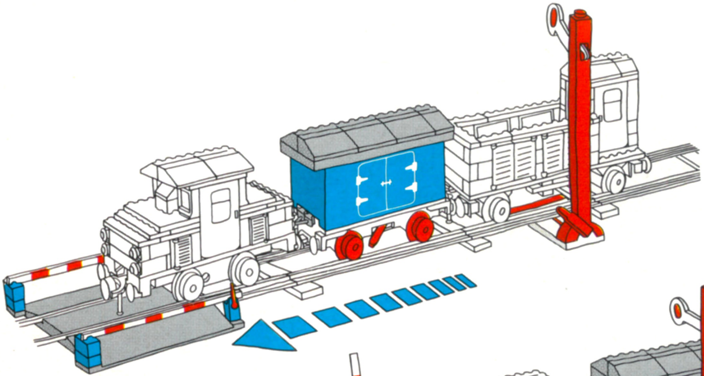
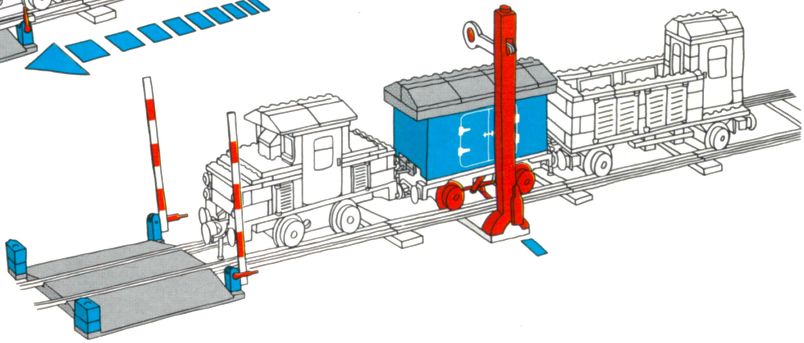

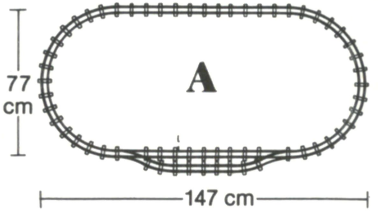

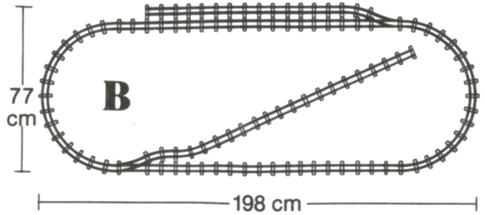

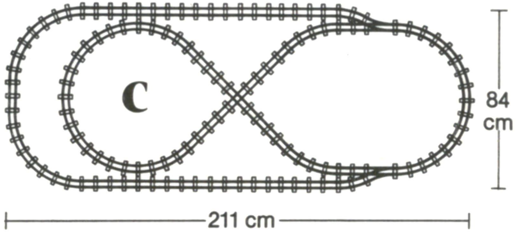

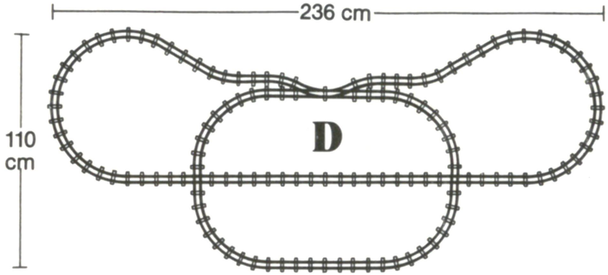

	7850	7851	7853	7852
A	2	2	0	1
B	4	3	0	1
C	4	4	1	1
D	3	5	2	1

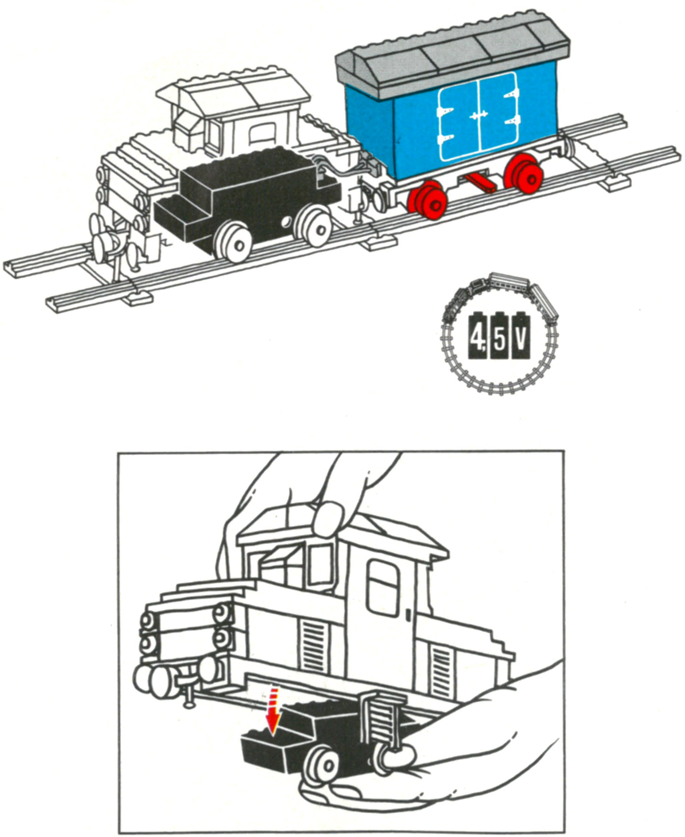
4,5V

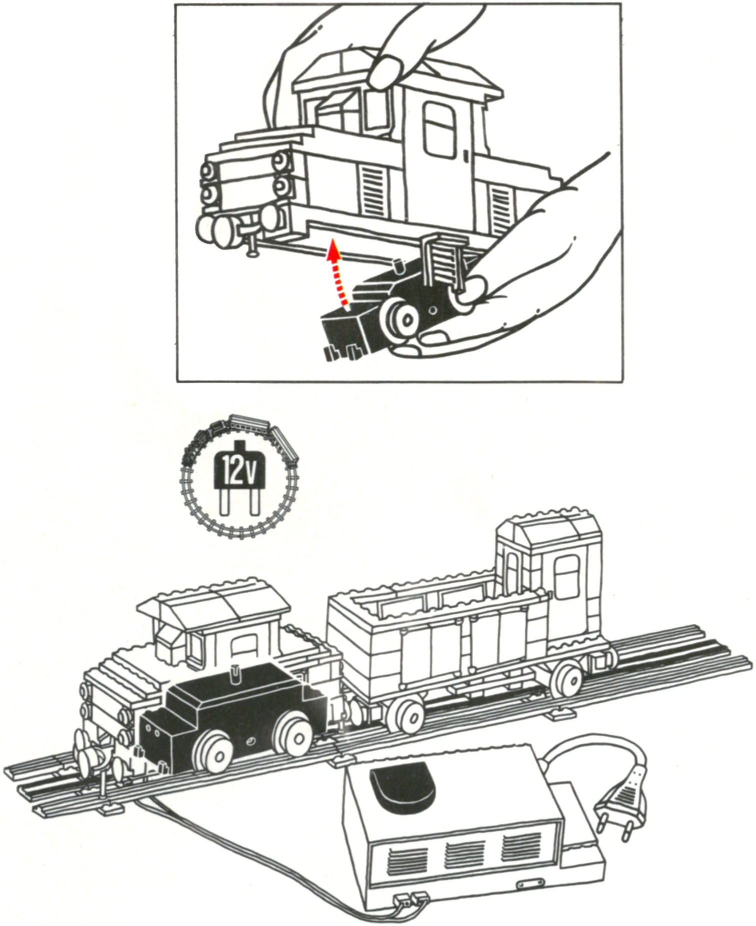
12V

Printed in Germany by Mühlmeister & Johler, Hamburg